DE

Diagram / Parts List

AD-3612

2019/03

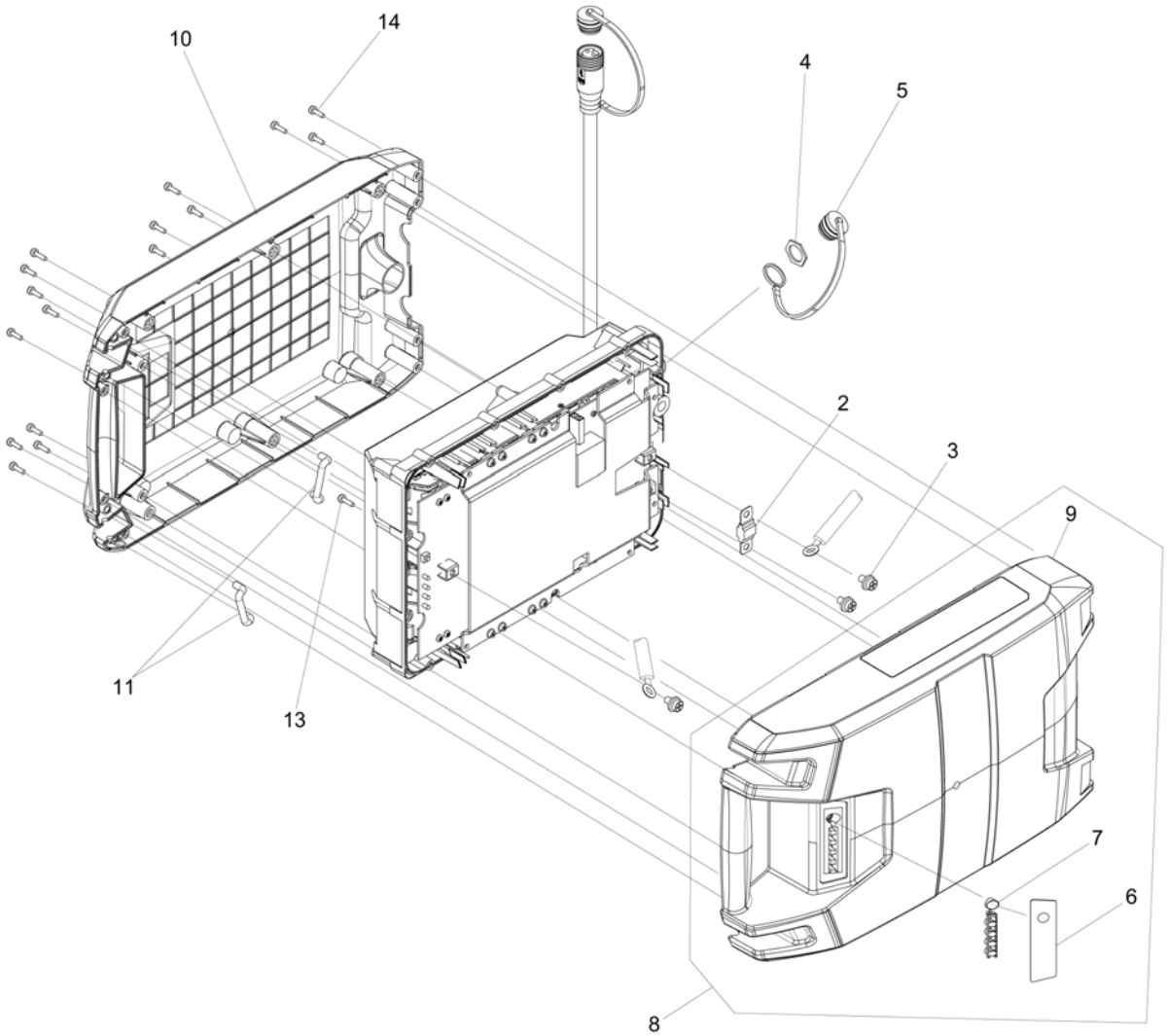
10
14
4
5
2
3
9
11
13
7
6
8

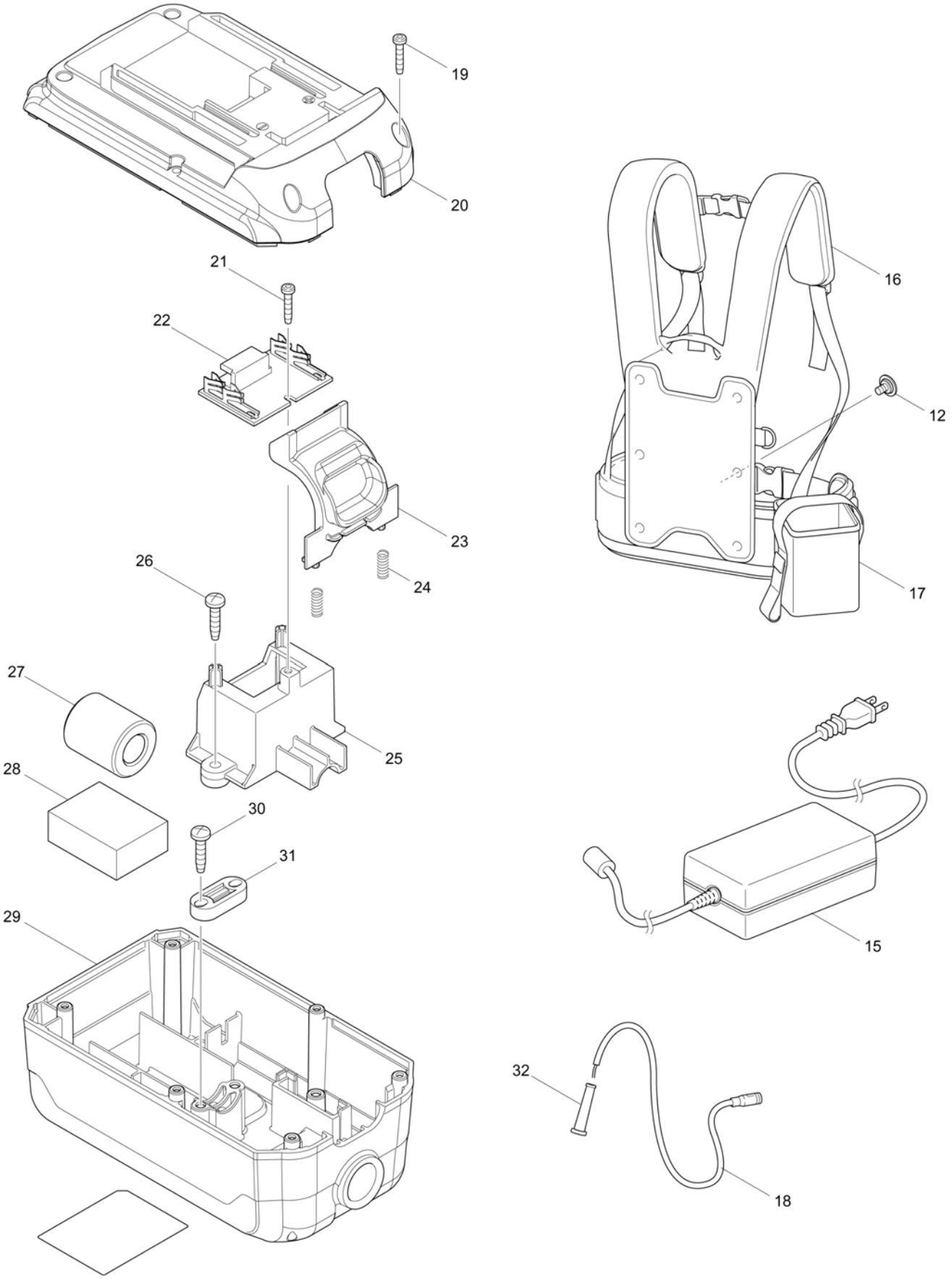
19
20
21
22
23
24
25
26
27
28
29
30
31
32
12
15
16
17
18

DE	GERMANY

AD-3612 /

Item	Sub	Parts No.	Parts Description	Qty	I/C	E/C No.	Close No.	Remark
001		ENH604013A	M17 WATERPROOF COVER FOR	1			Y06777	
002		ENE304005A	FUSE FOR MAIN BOARD PCB	1				
003		ENH204037A	M5*10 SCREW WITH NICKLE PLATED	3				
004		ENH103018A	NUT FOR DC-IN M15 CABLE	1				
005		ENH604014A	M15 WATERPROOF COVER FOR DC-IN	1				
006		ENH501020A	LED SOC PANEL	1				
007		ENM139009A	LED INDICATORS AND PUSH BUTTON	1				
008		ENM110036A	HOUSING- TOP COVER ASSY	1			Y06909	
008-1		ENM110036A	HOUSING- TOP COVER ASSY	1	O	Y06909		
	D10		INC. 6,7			Y06909		
009		ENM139001A	HOUSING-TOP COVER(MAKITA)	1			Y06764	
009-1		ENM139014A	HOUSING-TOP COVER(DOLMAR)	1	X	Y06764	Y06909	
010		ENM139002A	HOUSING- BOTTOM COVER	1				
011		ENM139007A	IRON BAR	2				
012		265008-3	+ FLAT HEAD SCREW M5	6				
013		ENH204043A	SAFETY SCREW FOR OUTER CELL	12			Y06828	
013-1		ENH204045A	SAFETY SCREW FOR OUTER CELL	12	<	Y06828		
014		ENH204043A	SAFETY SCREW FOR OUTER CELL	16			Y06828	
014-1		ENH204045A	SAFETY SCREW FOR OUTER CELL	16	<	Y06828		
015		ENE401046A	ADAPTOR (180W) FOR EU	1				
016		ENM139012A	HARNESS WITHOUT POCKET(DOLMAR	1				
017		ENM139013A	POCKET FOR HARNESS (DOLMAR)	1				
018		ENE504120A	DC-OUT CABLE (M17 W/P	1				
019		266277-9	TAPPING SCREW TORX 3X16	6				
020		452190-9	OUTER CASE (UPPER)	1				
021		266277-9	TAPPING SCREW TORX 3X16	1				
022		631879-4	TERMINAL BOARD COMPLETE	1				
023		140100-5	HOOK COMPLETE	1				
024		234120-0	COMPRESSION SPRING 4	2				
025		451260-1	INNER SUPPORT	1				
026		266326-2	TAPPING SCREW 4X18	2				
027		688140-0	LINE FILTER	1				
028		685718-0	SPONGE SHEET	1				
029		451256-2	OUTER CASE (UNDER)	1				
030		266326-2	TAPPING SCREW 4X18	2				
031		687140-7	STRAIN RELIEF	1				
032		682504-0	CORD GUARD 10-85	1				

Interchange
O : Yes
X : No
< : the new part can be substituted for the current.
> : the current part can be substituted for the new.
S : Interchangeable as a set.